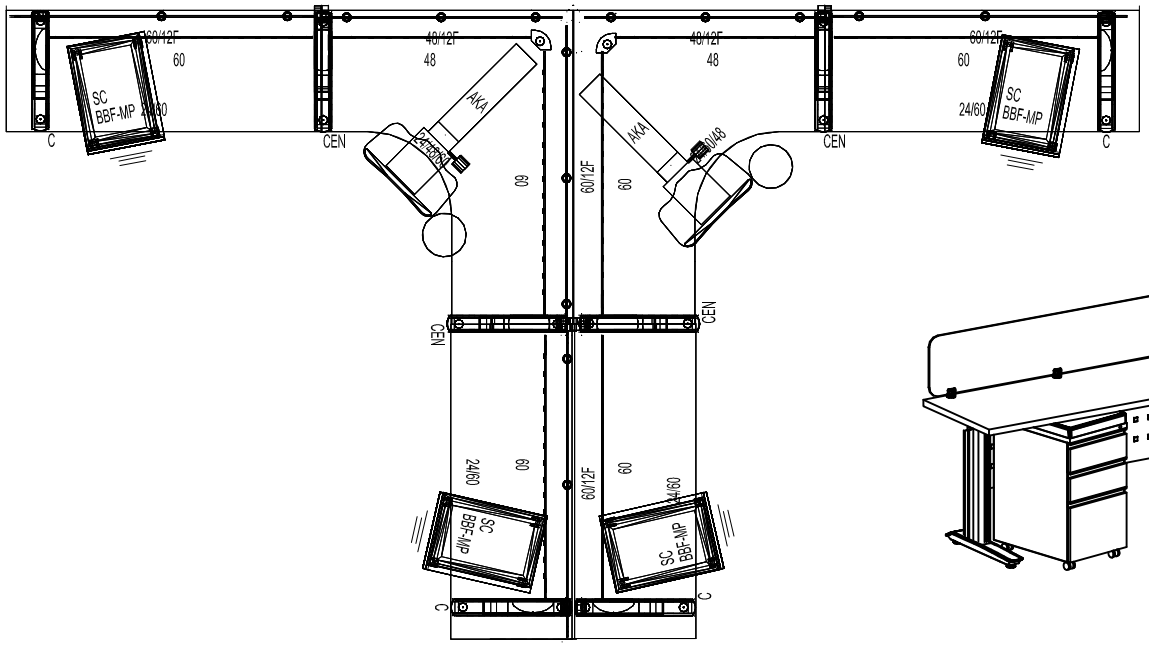

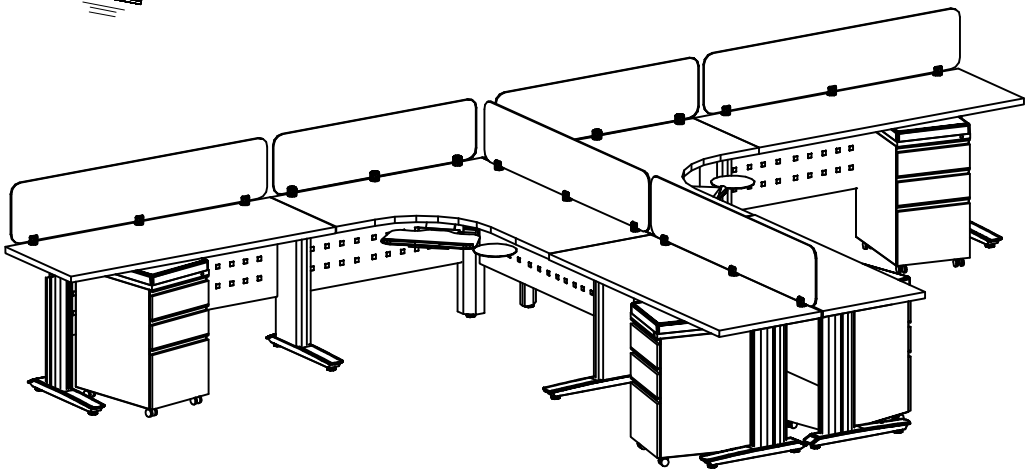

openplan SYSTEMS

HMU, LLC d/b/a Open Plan Systems
4700 Deepwater Terminal Rd.
Richmond, VA 23234
p. 888.869.4681
f. 804.275.2329

Date:	Quote #:	Drawn By:	CSR:	Scale:	Project:
Oct. 18, 2012		MLR		NTS	Typical- 2 Pack Freestanding

Dealer has ultimate responsibility for accuracy and correctness of component counts and measurements. Dealer shall verify and confirm all site dimensions and suitability of products and applications consistent with published guidelines and applicable codes. All plans, drawings and specifications are property of Open Plan Systems by HMU and may not be reproduced without written consent.

Approved:

Signature

Rev:	Date:	By:	Sheet #: